Ukupno djelovanje C_E, C_B, C_C

Za ω_1 i ω_2 > ω_3 i ω_4

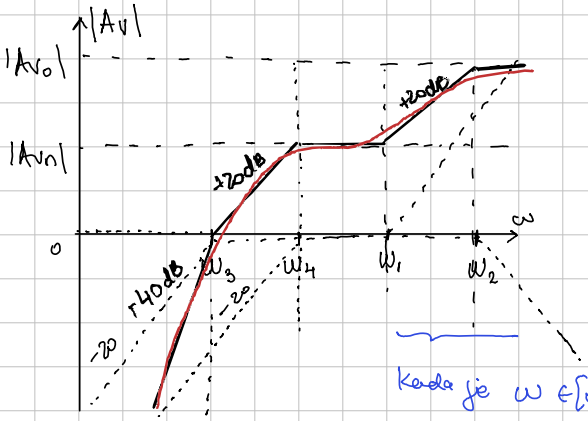

Kada je $\omega \in [\omega_1, \omega_2]$

C_B i C_C idu u k.s

$$A_v(j\omega) = \frac{U_{iz}}{U_{ul}}$$

$$= A_{vn} \cdot \frac{1 + j\frac{\omega}{\omega_1}}{1 + j\frac{\omega}{\omega_2}} \cdot \frac{j\frac{\omega}{\omega_3}}{1 + j\frac{\omega}{\omega_3}} \cdot \frac{j\frac{\omega}{\omega_4}}{1 + \frac{\omega}{\omega_4}}$$

$$R_{ul}' = r_{be} + (1 + h_{fe}) R_E$$

$$A_{v_1} = A_{vn}$$

$$\omega_d = \sqrt{\omega_2^2 - 2\omega_1^2}$$

Za ω_1 i ω_2 < ω_3 i ω_4

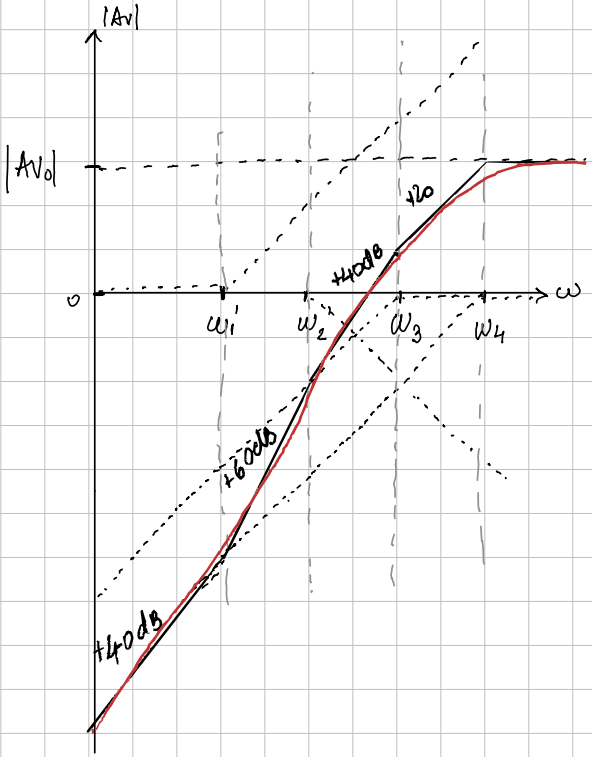

$$R_{ul}' = r_{be}$$

$$A_{v_1} = A_{v_0}$$

Određivanje donje granične frekvencije

→ na srednjim frekv (svi se kond kratko spajaju) $A_{v_0} = -h_{fe} \cdot \frac{R_C \| R_T}{r_{be}}$

Vremenske konst: (koje pojedini kond. određuje, ostali K. S.)

$$\tau_B = (R_B \| r_{be}) C_B \qquad \tau_E = \left(\frac{r_{be}}{1+h_{fe}} \| R_E\right) C_E \qquad \tau_C = (R_C + R_T) \cdot C_C$$

Donja granična frekv. $\omega_d = \max\{\omega_B, \omega_E, \omega_C\} = \max\left\{\frac{1}{\tau_B}, \frac{1}{\tau_E}, \frac{1}{\tau_C}\right\}$

→ jer gledamo s desna na lijevo (od srednjih prema niskim frekvenc.)

UVJET: prva sljedeća od ove MAX: mora biti barem 4x veća od ostalih → dominantni pol

↳ AKO NE:

procjena $\omega_d \approx \frac{1}{\tau_B} + \frac{1}{\tau_E} + \frac{1}{\tau_C}$

Primjer 5.2

1) statika

2) $r_{be} = \frac{U_T}{I_{BQ}}$

3) dinamika

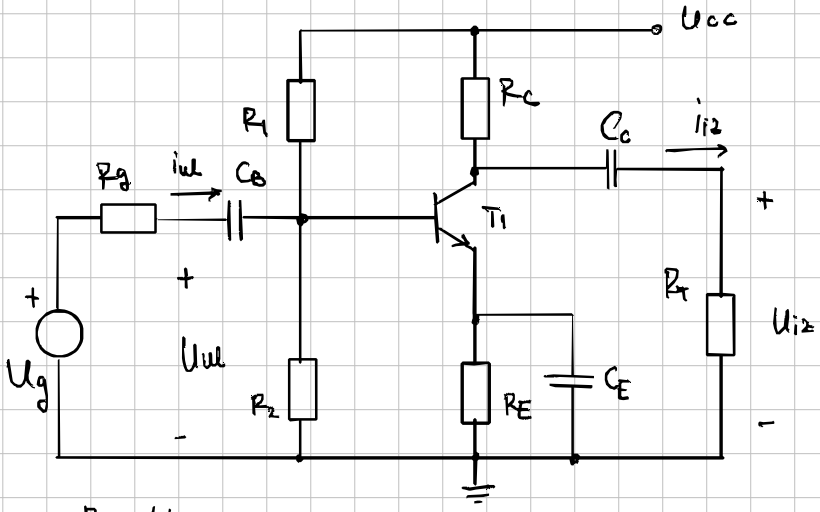

$U_{CC} = 15V$

$R_g = 500\Omega$ $\quad C_B = 10\mu F$ $\quad R_E = 1k\Omega$ $\quad C_C = 3\mu F$ $\quad R_T = 1{,}2k\Omega$

$R_1 = 30k\Omega$ $\quad C_E = 100\mu F$

$R_2 = 11k\Omega$

$\beta = 100 \approx h_{fe}$ $\quad U_\gamma = 0.7V$ $\quad U_T = 25mV$

$A_v = \frac{U_{iz}}{U_{ul}} = ?$ na srednjim frekv

+ odrediti donju graničnu

→ dinamika: izraz moramo znati

$$A_v(j\omega) = A_{v_0} \cdot \underbrace{\frac{1+j\frac{\omega}{\omega_1}}{1+j\frac{\omega}{\omega_2}}}_{C_E} \cdot \underbrace{\frac{j\frac{\omega}{\omega_3}}{1+j\frac{\omega}{\omega_3}}}_{C_B} \cdot \underbrace{\frac{j\frac{\omega}{\omega_4}}{1+j\frac{\omega}{\omega_4}}}_{C_C}$$

ω_2 – poveznom s onime što vidi C_E: $\omega_2 = \frac{1}{C_E \cdot \left(R_E \| \frac{r_{be}}{1+h_{fe}}\right)}$

$\omega_1 = \frac{1}{\tau_1} = \frac{1}{C_E \cdot R_E}$

to nemamo što izračunat

$\omega_3 = ?$

$\omega_4 = ?$

to je jednostavnije prema izračunu određujemo koja je ω prije

Primjer 5.2

1) statika

2) $r_{be} = \frac{U_T}{I_{BQ}}$

3) dinamika

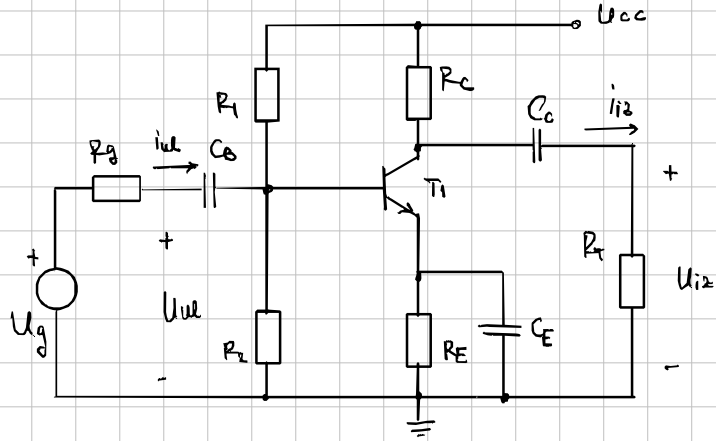

$U_{CC} = 15V$

$R_g = 500\Omega$ $C_B = 10\mu F$ $R_E = 1k\Omega$ $C_C = 3\mu F$ $R_T = 1.2k\Omega$

$\beta = 100 \approx h_{fe}$ $R_1 = 30k\Omega$ $C_E = 100\mu F$ $R_C = 2k\Omega$

$R_2 = 11k\Omega$

$U_\gamma = 0.7V$

$U_T = 25mV$

$A_N = \frac{U_{iz}}{U_{ul}} = ?$ na srednjim frekv

+ odrediti donju graničnu

STATIKA:

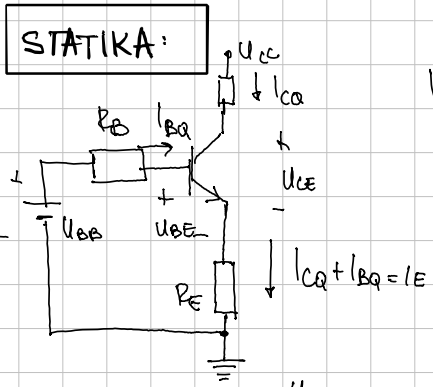

$$U_{BB} = \frac{R_2}{R_1+R_2} \cdot U_{CC} = 3.93V$$

$$R_B = R_1 \| R_2 = 8.05k\Omega$$

$$-U_{CC} + U_{CEQ} + I_{CQ} \cdot R_C + R_E \cdot I_{CQ} = 0$$

$$-U_{BB} + R_B \cdot I_{BQ} + U_{BEQ} + (I_{CQ} + I_{BQ}) \cdot R_E = 0$$

$$I_{BQ} = \frac{U_{BB} - \overset{U_\gamma}{\overset{\parallel}{U_{BEQ}}}}{R_B + (1+\beta) \cdot R_E} = \boxed{29.62\mu A} \longrightarrow \boxed{I_{CQ} = 2.96\,mA}$$

$$U_{CEQ} = U_{CC} - I_{CQ}(R_C + R_E) \Longrightarrow \boxed{U_{CEQ} = 6.11V}$$

$$r_{be} = \frac{U_T}{I_{BQ}} = \frac{25mV}{29{,}62 \times 10^{-6}} \longrightarrow \boxed{r_{be} = 844.02\Omega}$$

Dinamika: → ne izraditi opet (ali opet ako se promijeni sklop moraš ć'u)

$$A_v(j\omega) = A_{vn} \cdot \underbrace{\frac{1+j\frac{\omega}{\omega_1}}{1+j\frac{\omega}{\omega_{2E}}}}_{C_E} \cdot \underbrace{\frac{j\frac{\omega}{\omega_3}}{1+j\frac{\omega}{\omega_3}}}_{C_B} \cdot \underbrace{\frac{j\frac{\omega}{\omega_4}}{1+j\frac{\omega}{\omega_4}}}_{C_C}$$

$$\omega_{2E} = \frac{1}{C_E\left(R_E \parallel \frac{r_{be}}{1+h_{fe}}\right)}$$

$$\omega_1 = \frac{1}{C_E \cdot R_E}$$

$$\omega_B = \frac{1}{C_B(R_B \parallel r_{be})}$$

$$\omega_C = \frac{1}{C_C(R_C + R_T)}$$

$\omega_1 = 10$ rad/s $\quad \omega_{2E} = 1206.7$ rad/s $\quad \omega_{3B} = 130,9$ rad/s $\quad \omega_{4C} = 10^4,17$ rad/s

$$A_{vn} = -\frac{h_{fe} \cdot (R_C \parallel R_T)}{r_{be} + (1+h_{fe}) \cdot R_E} \rightarrow A_{vn} = -0.736$$

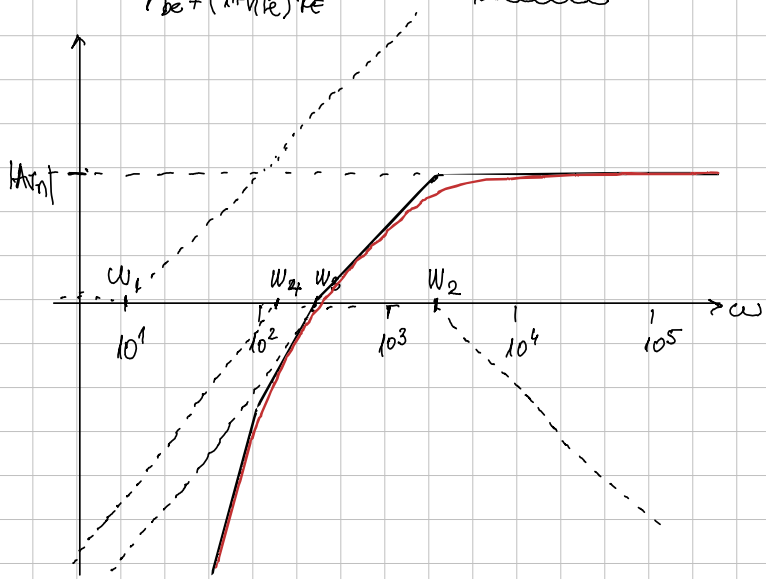

$$\omega_d \approx \frac{1}{\tau_B} + \frac{1}{\tau_E} + \frac{1}{\tau_C}$$

$\omega_d \approx 1441.77$